vanEsch

www.van-esch.com

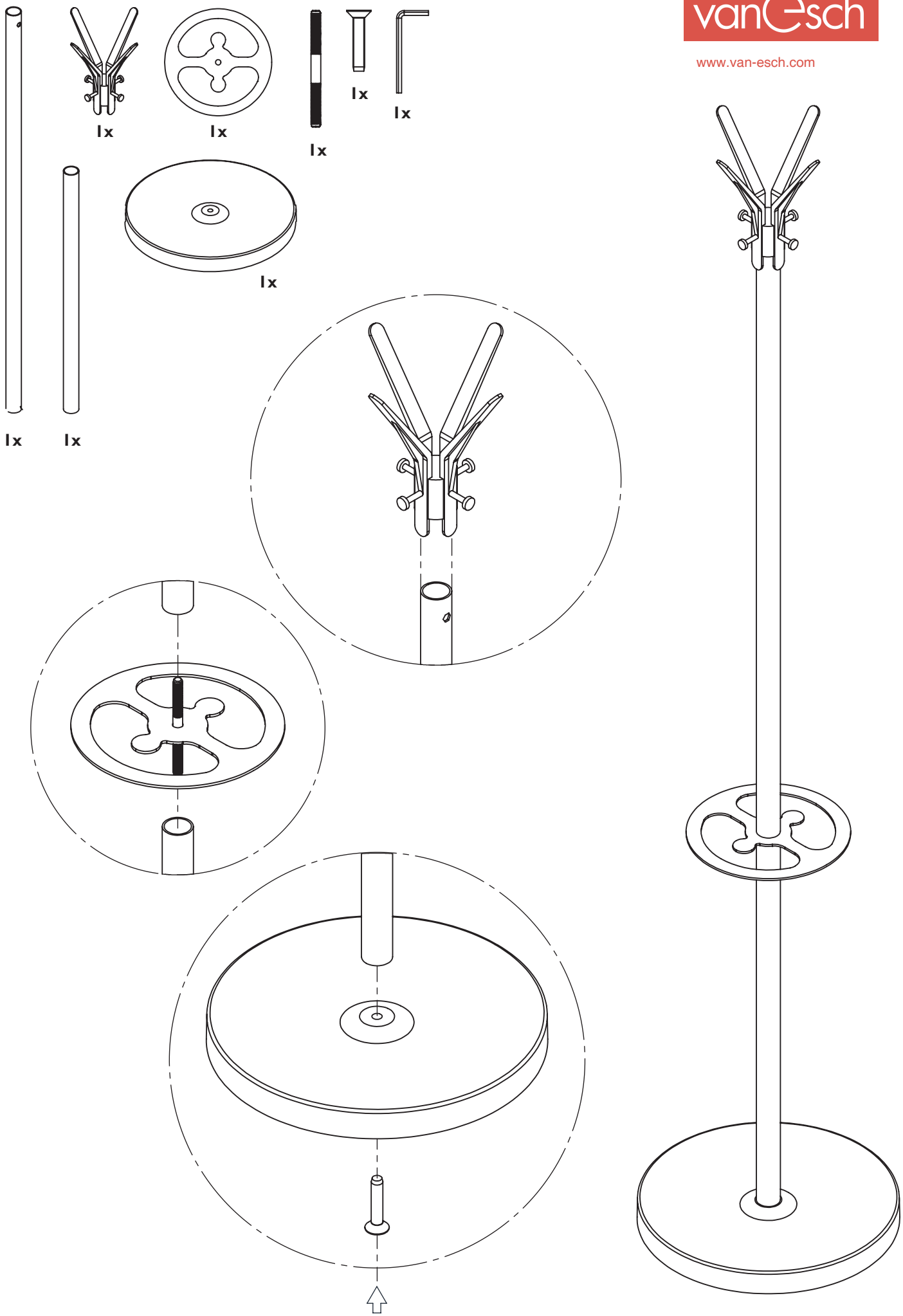

TERTIO PALADINO+